P/N : **HY03D11FB**

2,92mm female to 2,4mm male Precision adapter

ADAPTERS

SPECIFICATIONS	
Connecteur 1 / *Connector #1*	2,92mm female
Connecteur 2 / *Connector #2*	2,4mm male
ELECTRIQUES / *ELECTRICAL*	
Bande de fréquence / *Frequency bandwidth*	DC-40 GHz
Impédance / *Impedance*	50 Ohms
TOS / *VSWR*	1,15:1 @40GHz
Pertes d'insertion / *Insertion loss*	0,35dB max@40GHz
MECANIQUES / *MECHANICAL*	
Gamme de température / *Temperature range*	-55°C / +165°C
Nombre de connections / *Matings*	>500
MATERIAU / *MATERIAL*	
Corps / *Body*	Passivated stainless steel
Contact central / *Center contact*	Beryllium Copper Alloy, Gold plated
Isolant / *Dielectric*	PEI
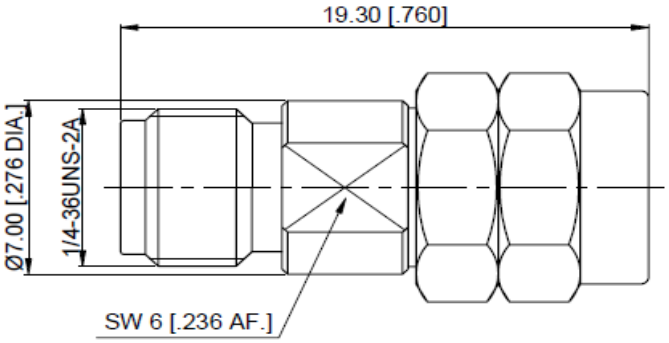
DIMENSIONS - For reference only